SRTTU

JCARME
ISSN: 2228-7922
Journal of Computational and Applied Research in Mechanical Engineering
Vol. 9, No. 2, pp. 169-182
jcarme.sru.ac.ir



Grasp analysis of a four-fingered robotic hand based on matlab simmechanics

E. Neha[a,*], M. Suhaib[a], S. Asthana[b] and S. Mukherjee[c]

[a]Jamia Millia Islamia, New Delhi, Delhi,110025, India
[b]IGDTUW, New Delhi, Delhi,110006, India
[c] Indian Institute of Technology, Delhi, India

Article info:

Type:	Research
Received:	15/03/2018
Revised:	18/02/2019
Accepted:	23/02/2019
Online:	25/02/2019

Keywords:
Simmechanics,
Multi-finger hand,
Robotic gripper,
Tendon-driven mechanism.

Abstract

The structure of the human hand is a complex design comprising of various bones, joints, tendons, and muscles functioning together in order to produce the desired motion. It becomes a challenging task to develop a robotic hand replicating the capabilities of the human hand. In this paper, the analysis of the four-fingered robotic hand is carried out where the tendon wires and a spring return mechanism is used for the flexion and extension motion of the fingers, respectively. Stable grasping and fine manipulation of different objects are desired from any multi-finger robotic hand. In this regard, it becomes necessary to check the performance of the four-fingered robotic hand. Simulations are performed for the hand to grasp objects of different size and shapes, and the hand model is controlled in a MATLAB environment using the SimMechanics toolbox. Here the Kinematics and Dynamics study of the hand system is carried out by importing the Solidworks model into the SimMechanics. Simulation results demonstrate that the developed hand model is able to grasp objects of varying size and shapes securely.

Nomenclature

e: Error vector
r: Cartesian Position
ṙ: Cartesian Space Velocity
r̈: Cartesian Space Acceleration
J_i (θ): Jacobian Matrix for the i^{th} Manipulation variable
$J^{\#}$: Pseudoinverse of the jacobian matrix
f_i (θ): Function of (θ)
M (θ): Inertia matrix
V (θ,˙): Centripetal and Coriolis forces terms
θ̇ : Joint Velocity
θ̈ : Joint Acceleration

Superscript

i: Manipulation variable
n: Degree of joint space
m: Degree of Cartesian space

Greek symbols

θ: Joint Angle
G(θ): Gravity vector
θ̇: Joint Velocity

*Corresponding author
email address: eramneha@gmail.com

1. Introduction

Stable grasping and fine manipulation of different objects by a multi-finger robotic hand require a number of contact locations on the surface of the objects where the fingertips collide. A number of techniques have been proposed to control the robotic hands for grasping tasks [1].

The grasp capability analysis has been carried out by researchers through applying the different loads at the fingertips [2], and the balancing capability of any object by the hand has been analyzed. The analysis of multiple robot arms has also been carried out in a similar manner where the coordination of robot arms has been examined along with the determination of maximum applicable force/torque [3]. The problem has been formulated as an optimized one under the constraints of the dynamic equation of the robots and their joint driving torque limits. However, the multi-fingered grasp is different from the one of the multiple robot arms, in which the forces can be applied in one direction only. The fingers can only push, not pull, on the object because there is no adhesive between the object and the fingers. Therefore, the grasping capability of multi-fingered hands is not the same as the grasping capability of multiple robot arms [4].

The eigan-grasp approach has been adopted in order to plan for stable robot grasps [5]. A data-driven grasp technique has also been derived from similar lines [6]. A neural network has been adopted to analyze the grasps of 3D shapes objects [7]. Synthesized image data has been utilized to train a classifier to predict grasping points based on the features extracted from 2D images [8 and 9]. Collision-free stable grasps have been planned for dexterous hands in cluttered environments [10]. The task wrench space has also been used by various researchers to investigate task-oriented grasping [11 and 12]. This employs the analysis of the contacts and the potential wrench space of a grasp [13]. A number of methods have been presented to solve the configuration problem of a robotic hand for grasping a given object with a specific contact region [14]. A Bayesian network to model task constraints has been designed in goal-oriented grasping [15]. A method to analyze grasp affordance on objects based on object edge reconstructions has also been developed [16]. Also, a part-based planning algorithm has been proposed to generate stable grasps from human demonstration [17].

The structure of control is based on the decomposition of grasping and manipulating forces in accordance with the Coulomb friction between the specified object and the robot fingers [18 and 19]. The control schemes involved in independent grasping and manipulating motions or forces have been mostly a beneficial area of robotics research [20]. A number of theoretical methods have been proposed by various researchers, along with their control strategies for the analysis of different hands. These manipulation problems were thereafter recognized faster, and various control schemes were applied in solving their issues. The control of position with respect to the applied force has been analyzed in order to compensate the uncertainties regarding the stiffness of the constraint environment. Later, the force control sensors were employed for solving the problem [21]. Various methods for automatic grasp generation has been demonstrated based on object shape primitives [22]. Simulations have been performed in MATLAB/ Simulink environment for the 3D visualization of the robotic system using the block diagram and programming tools [23]. Also, researches are now being carried out to perform a simulation of the multi-finger robotic gripper to attain stable grasping [24].

Computer simulations have been performed to verify and check the performance of the robotic hands prior to experimentations [25]. Various software packages are available to solve equations, control, data manipulation, and 3D visualization, along with the programming facility [26]. Different software available for graphical programming and realizing the robotic hands in the virtual environment are LabVIEW [27], VRML, MATLAB Simulink, and SimMechanics [28].

Due to the rising demands, several types of research have been conducted on simulations of different robots in the virtual environment. Numerous MATLAB based tools are available

to carry out simulations of the robot manipulator [29]. Different types of industrial robots and parallel manipulators have also been examined using the MATLAB SimMechanics [30]. The integration of the design software with the MATLAB SimMechanics has proved to be an efficient tool in the area of research and development [31]. The improvement of effective computational platforms for simulating the behavior of robotics structures constitutes a fundamental device for designers, customers, and researchers of this subject. These simulation platforms are very crucial for robot manipulation because they permit the computation of the robot's trajectories which might be required for grasping objects in the environment [1].

The representation of a CAD model in SimMechanics environment comprises of blocks having a definite physical and mechanical meaning. A list of blocks is present in the library for different components such as bodies, joints, sensors and actuators, constraints and drivers, and force elements. Along with these standard blocks, the modeling of the complex system also requires advanced functioning blocks. All blocks are configurable by the user via graphical user interfaces as known from Simulink [32]. MATLAB programming functions can also be incorporated with custom blocks in order to obtain the output according to the desired need.

The integration of the CAD model of the four-finger robotic hand with simulation software has been carried out in order to examine its behavior and check its performances while grasping different objects [33]. The paper used SolidWorks for the development of CAD Model of a robot, and SimMechanics was used to simulate the robot in a virtual environment. The four-fingered robotic hand's assembly was first exported as an XML and STL files using SimMechanics CAD translator module [34]. They were then imported into MATLAB SimMechanics as a model file. The imported model was attached to sensors and actuator controls to analyze the simulations [35]. The paper describes designing and simulating a four-fingered gripper to provide motions for the fingertips while grasping different objects. The fingers were controlled in a manner to grasp any object at the contact points.

In the present paper, a four-fingered tendon actuated robotic hand structure modeled using CAD software is proposed for grasping analysis, which is designed to mimic a human hand in order to perform grasping and manipulation tasks.

2. Modeling of hand

A number of robotic hands were developed in the past with the aim to mimic a human hand [36]. Different hand adopts different mechanism and drive technologies according to their respective designs. The UTAH/MIT hand was developed to carry out research with three fingers. This hand is actuated by means of tendon transmission along with pneumatic actuators [37]. The Stanford/ JPL hand also employs a tendon driven mechanism for both flexion and extension of the fingers [38]. Similarly, the Ultralight hand also comprises of the pneumatic actuation placed inside the fingers for the flexion/retraction of fingers [39]. Various prosthetic hands were also designed to replace human hands [40]. The Robonaut hand came with the aim to replicate an astronaut hand in terms of size, strength, and kinematics to meet the requirements of NASA for extravehicular activities [41]. The actuation of this hand is remote, with brushless motors and flexes shaft transmission system. The Barret hand is also actuated by means of brushless motors where only four joints are controlled out of the eight joints of the three fingers. Electrical motors are generally employed in order to produce a larger grip force as compared to pneumatic drives. The DLR hand II has a modular design in which the actuation is placed inside the fingers provided by electric motors [42].

In this section, the solid model of the four-fingered robotic hand mechanism is developed using the SolidWorks software, and further, simulation is carried out in Simulink. To transfer the model from SolidWorks to Matlab and

Simulink, the designed model is embedded in SimMechanics. In order to make a realistic model, the dimensions and design are set keeping in view of the human hand. The proposed hand has three fingers connected in series and one opposing thumb. There are three phalanges (links), i.e., proximal, middle, and the distal phalanges, in every finger. Each finger has three DOFs while the thumb has two DOF's. The proximal link of the thumb has fixed joint and is connected to the base. All the other links of the fingers have rotational joints with one DOF. Thus, the hand has a total of 11 DOFs. In addition, the palm is also introduced for power grasping. The assembled part of the whole mechanism, along with a cylindrical object to be grasped is shown in Fig. 1.

A tendon (string) flows through each finger to transfer the movement of the actuator from one link to the other simultaneously. The tendon is fixed to the tip of each finger from one end, while the other end of the string is left free, which could be either connected to weights or actuators. The phalanges of the finger contract on the application of force (tension) in the tendon from the free end side. Each phalange is connected to the adjacent phalange by the pin joint. A moment is created at the pin joint which forces the phalange to move. A constant force spiral spring is used to retract the gripper to its rest position [43].

This newly designed four-finger robotic hand is different from the other hands, as all the previously designed hands used either tendon actuation for both extension/flexion of the fingers, or used the electric and pneumatic motors for the actuation process. But in the present hand, tendon actuation system is used for the flexion of the fingers where a spring return mechanism is incorporated for extension of the fingers. The spring return mechanism enables the rapid accomplishment of the extension of fingers when they are released after grasping an object, in order to minimize various frictional and time losses. There is a considerable amount of frictional and time losses in other previously designed hands having either tendon actuation for both extension/flexion of fingers or using electric and pneumatic motors. This auto retraction of the fingers due to the spring mechanism is an important feature of this hand.

For simplicity, all redundant parts have been removed in order to perform the desired simulations, as shown in Fig. 2. Mechanical systems are modeled and simulated using different tools to specify different bodies and their mass properties, kinematic constraints, motion limits to execute, and measure body motion limits, etc. [28].

The CAD model file is converted to an XML file and imported to SimMechanics by the sim import inbuilt MATLAB function. The block diagram model converted from CAD model is shown in Fig. 3. The physical model represents all the body parts in the form of blocks with different DOF's, positions, orientations, and masses. Further simulations are performed using this model in order to produce the Flexion motion of the fingers for grasping tasks. All the joints are modeled using a revolute block, providing one DOF. The base and palm, along with the phalanges, are modeled using body blocks.

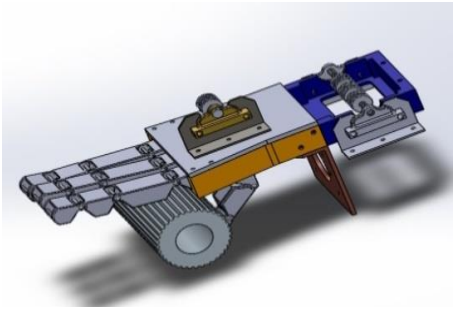


Fig. 1. Final assembled model of four-fingered robotic hand grasping an object.

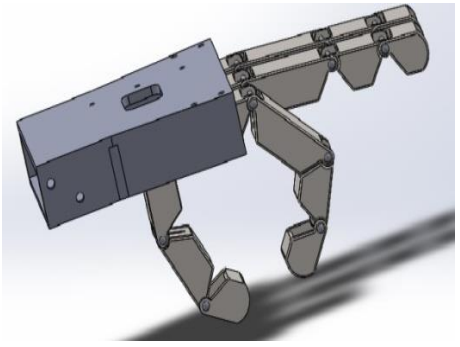


Fig. 2. Major assembly with no redundant parts and mapping of revolute joints.

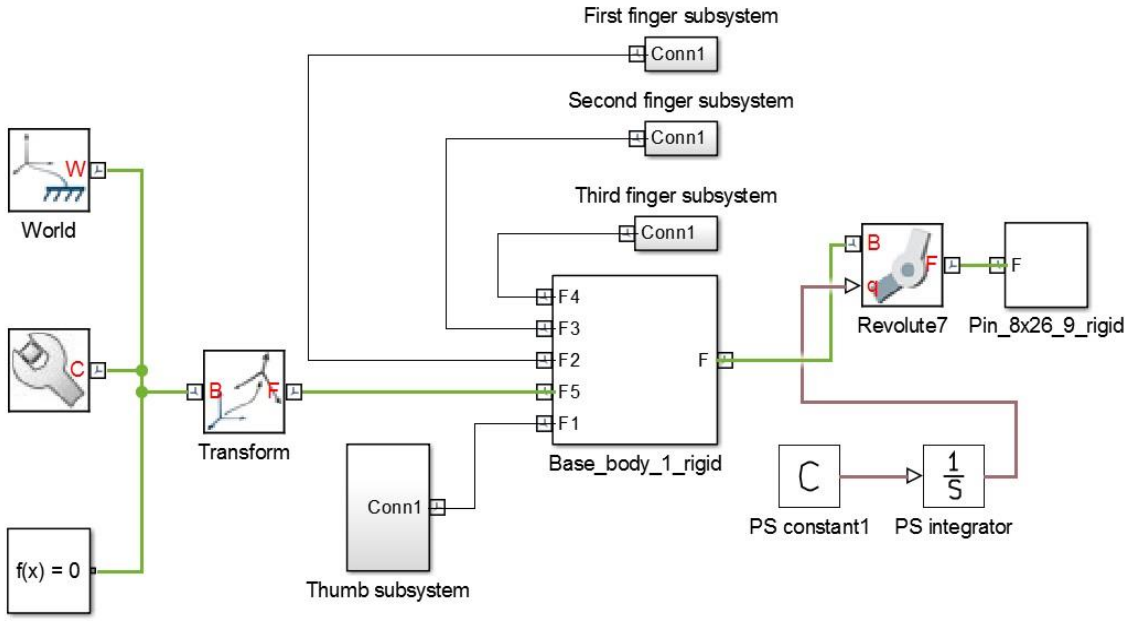


Fig. 3. Four-fingered robotic hand mechanism.

The four-fingered robotic hand mechanism has four sub-systems, namely first finger subsystem, second finger subsystem, third finger subsystem, and thumb subsystem (see Fig. 3). All the subsystems of the fingers have an equal number of blocks with symmetric patterns while the thumb subsystem has fewer blocks with similar patterns. A rigid Base plate is attached to the other transformation plates to control the motions using a control system.

3. Controller design

The control system is developed based on the kinematics of the model where the joint parameters are calculated when the hand moves to grasp an object. The joint angles are calculated for each joint using a predefined sinusoidal trajectory with a period of 2π for both flexion and extension of fingers. The robot finger must move along a prescribed trajectory through the robot finger workspace. This task is specified using the kinematic relationships between the joint variable $\boldsymbol{\theta} \in \boldsymbol{R^n}$, and the manipulation variable is expressed by:

$$r_i = f_i(\theta), \tag{1}$$

On differentiating Eq. (1),

$$\dot{r}_i = J_i(\theta)\dot{\theta}, \tag{2}$$

where $J_i(\theta)$ is the jacobian matrix of the *i*-th manipulation variable. The pseudoinverse of the jacobian matrix is used to determine the general solution to Eq. (2) as given below:

$$\dot{\theta} = J_1^{\#}(\theta)\dot{r}_1 \tag{3}$$

where $\boldsymbol{J_1^{\#}(\theta)} \in \boldsymbol{R^{n\times m}}$ is the pseudoinverse of the jacobian matrix $\boldsymbol{J_i}$ [43].

The control system of robot fingers is a collection of joint controllers attached at every single joint to drive it individually. The model that is used to compute the torque is based on the rigid body dynamic equation [44], which is as follows:

$$\tau = M(\theta)\ddot{\theta} + V(\theta, \dot{\theta}) + G(\theta) \tag{4}$$

where **M(θ)** is the *n x n* inertia matrix of the manipulator, $\boldsymbol{V(\theta, \dot{\theta})}$ is an *n x 1* vector produced by Centripetal and Coriolis forces terms, and **G(θ)** is an *n x 1* vector of gravity terms. The elements of M(*θ)* and G(*θ*) is a function that depends on *θ,* that is the joint angle of all the joints of the hand. Differentiate Eq. (2) to obtain

$$\ddot{r}_i = J_i\ddot{\theta} + \dot{J}_i\dot{\theta} \tag{5}$$

Now, a feedback control scheme is designed so that the following equations illustrate the closed loop characteristics.

$$\ddot{e} + s_1\,\dot{e} + s_2\,e = 0 \quad (6)$$

$$e = r^d(t) - r \quad (7)$$

where $\boldsymbol{r^d(t)}$ and $\boldsymbol{r}$ are the desired and actual trajectory, respectively. **e** is the error vector and $\boldsymbol{s_1}$ and $\boldsymbol{s_2}$ are the positive feedback coefficients. The above feedback scheme is to be incorporated in Eq. (5) to get:

$$J_i\ddot{\theta} = \ddot{r}^d(t) - \dot{J}_i\dot{\theta} + s_1\dot{e} + s_2\,e = k_i(\theta, \theta, \dot{t}) \quad (8)$$

For i=1,

$$\ddot{\theta} = J_1^{\#}\,k_1 \quad (9)$$

A number of controller options are available in SimMechanics Simulink library. The four-finger robotic hand has an asymmetric design; therefore, the same controller can be applied to the other subsystems. MATLAB programming functions are incorporated with custom blocks to control the subsystems according to the desired needs.

Fig. 4 shows the block diagram of the control system added to the mechanism. Graphs are plotted to compare the peak values at the time of proper grasp. In the thumb mechanism, two of the links or phalanges are activeed with the revolute joint between them to control the sub system.

Fig. 5 shows the thumb control system where an input signal is provided for every joint using the control system, shown in Fig. 4, to perform the grasping task and obtain the desired four outputs. Similarly, Fig. 6 shows the finger mechanism, where three revolute joints are controlled to calculate the position, velocity, acceleration, and torque for each of the joint motion while grasping an object. The control objective is to move the hand in 10 s time in order to grasp an object and come back to its rest position.

object.

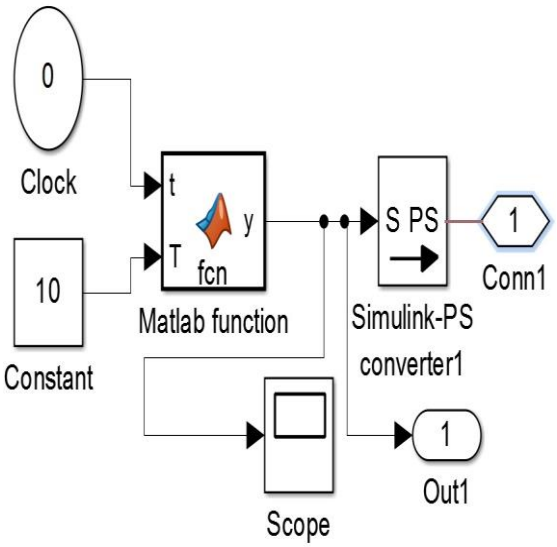


Fig. 4. Control system added to the mechanism.

4. Simulations and results

The 3D virtual environment is created for the four-finger tendon actuated robotic hand in order to grasp different objects. For the grasping process and analysis, simulations are performed where the hand is examined for grasping two different types of objects. The grasping stability has to be examined for holding objects of both uniform as well as varying cross sections along the z-axis. A cylindrical object is chosen for an object of the uniform cross-section and a spherical one for varying geometry about the z-axis.

4.1. Cylindrical objects

Three cylindrical objects were chosen and placed at a fixed position in the 3D space. The grasping process involves the movement of the hand from its rest position to hold an object and thereafter returning back to its home position. Simulations are conducted where the initial position of the hand is shown in Fig. 7 at the beginning of the grasp. Then the hand moves to reach the object as shown in Fig.8 to grasping a cylindrical

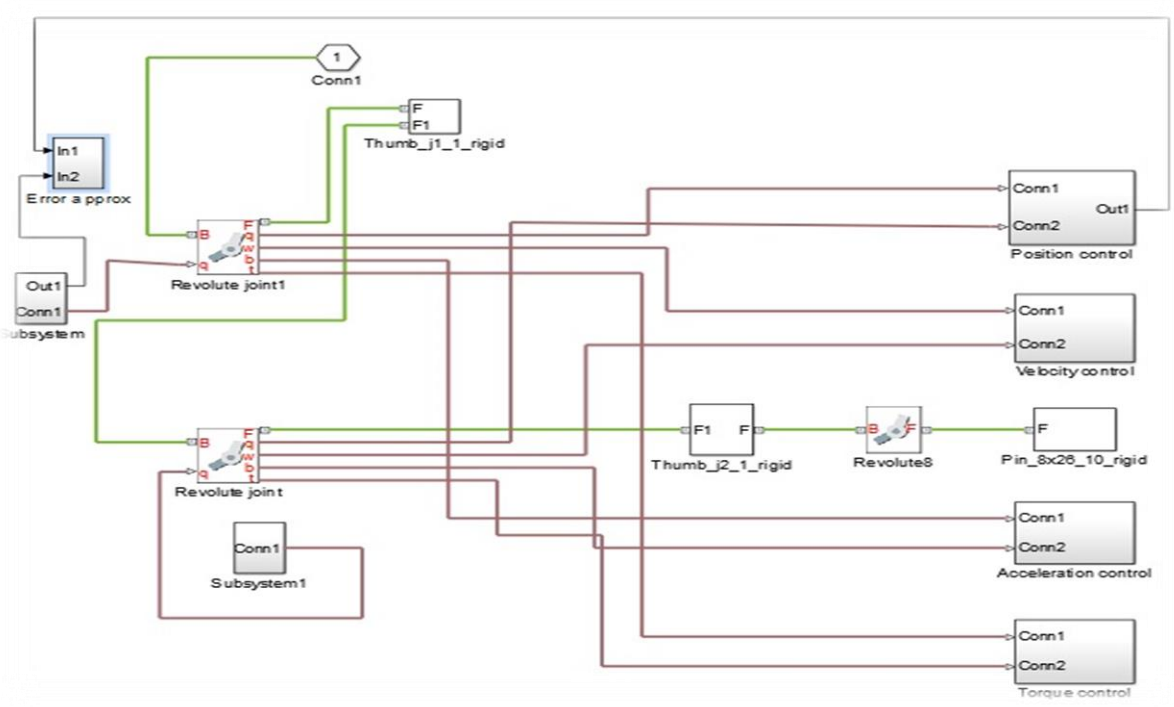


Fig. 5. Thumb control system.

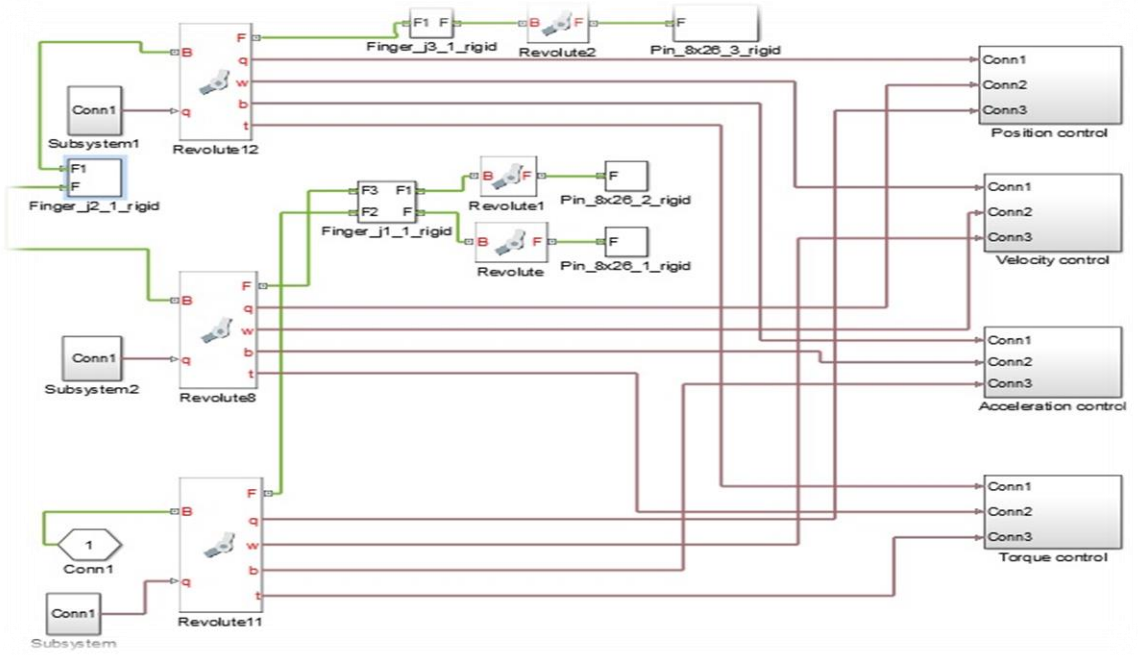


Fig. 6. Finger control system.

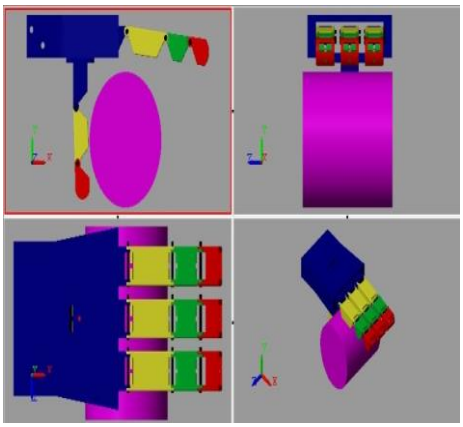


Fig. 7. Initial position of hand before grasping.

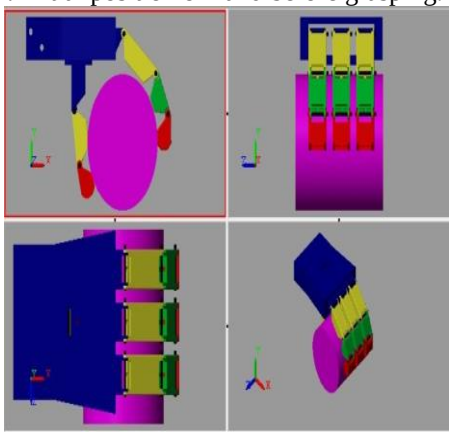
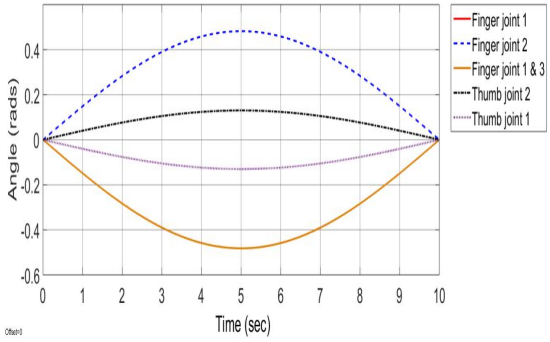
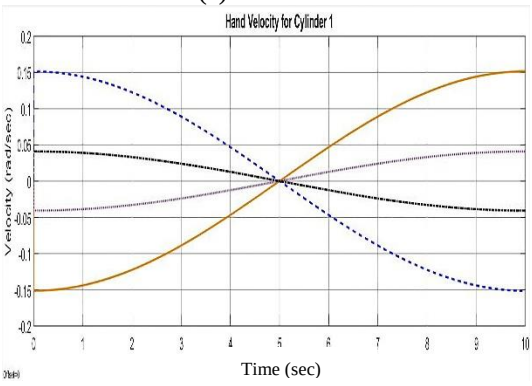


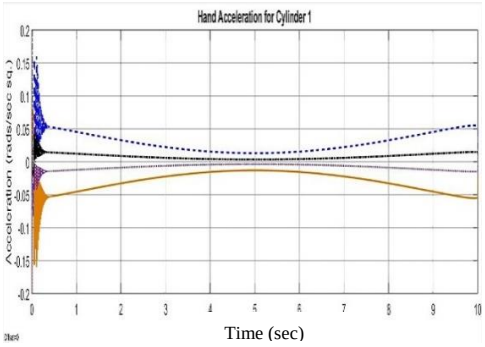
Fig. 8. Position of hand while grasping a cylinder.



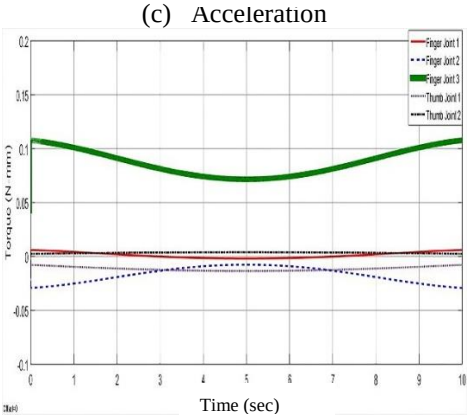
(a) Position



(b) Velocity



(c) Acceleration

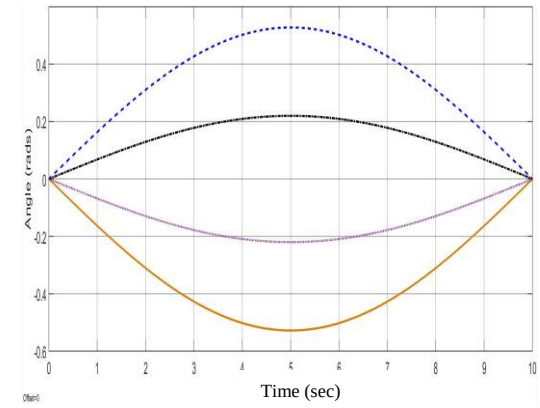


(d) Torque

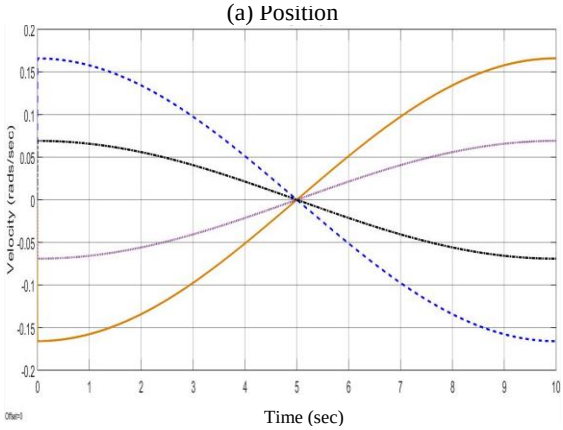
Fig. 9. Motion plots while grasping a cylinder c1.

The simulation time is set as 10 s for the complete grasp process where the position in radians as the motion is angular, the velocity in radians per s, the acceleration in radians per sq. s and the torque in N-mm can are computed for the thumb and fingers, separately. In case of the cylinder, as the cross-section is uniform, all the three fingers perform the same motion. Fine motion simulation results are presented for the thumb and finger for grasping the three cylinders of varying diameter, as shown in Figs. 9-11. Thereafter, plots are analyzed, and the peak values of hand parameters are recorded while grasping cylinders of varying diameters listed in Table 1.

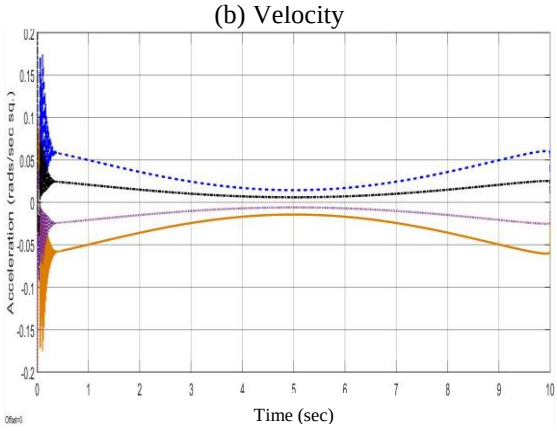
After analyzing the plots obtained from the simulation for grasping cylindrical objects of varying diameters, it was observed that as the diameter of the cylinder decreases, the joint angles for the thumb as well as the fingers increases. This further leads to an increase in the joint velocity and acceleration, and as a result, the torque required for the movement of the fingers also increases.



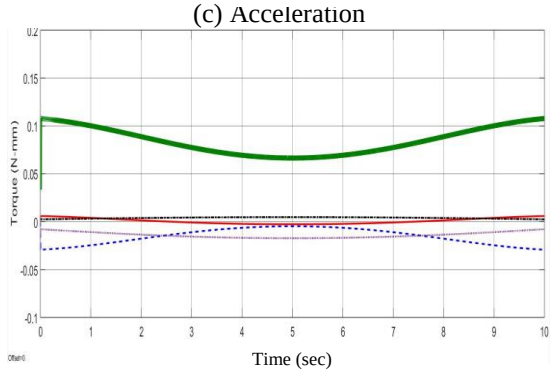
(a) Position



(b) Velocity

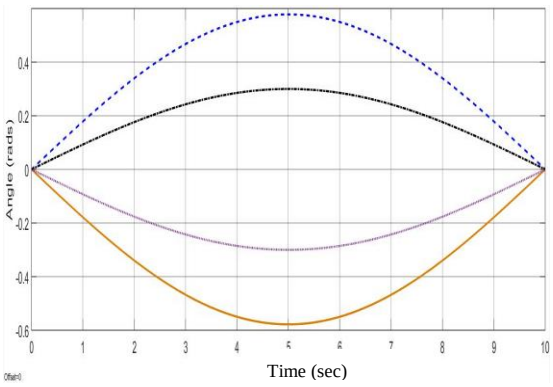


(c) Acceleration

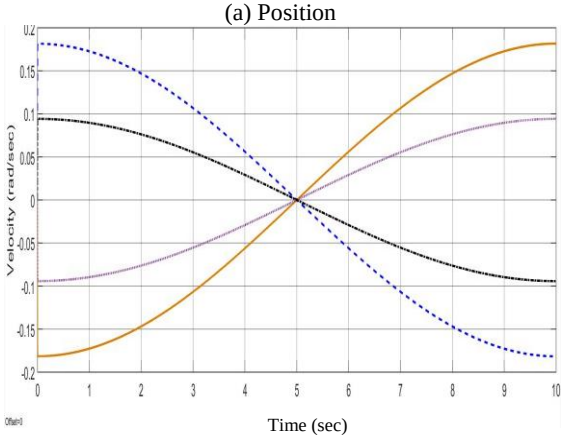


(d) Torque

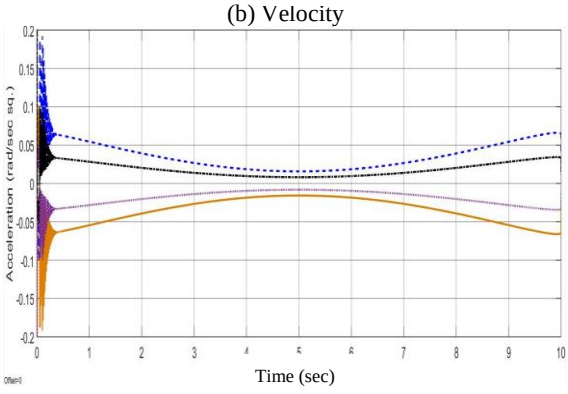
Fig. 10. Motion plots while grasping a cylinder c2.



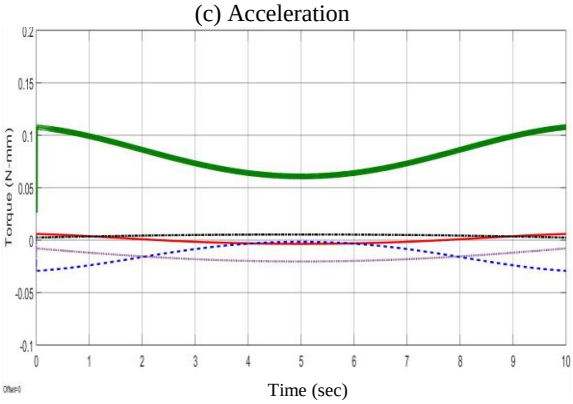
(a) Position



(b) Velocity



(c) Acceleration



(e) Torque

Fig. 11. Motion plots wh ile grasping a cylinder c3.

Table 1. Peak values of hand parameters while grasping cylinders of varying diameters.

S. No.	Parameters	Cylinder (C1), D1= 4 inches		Cylinder (C2), D2=3.5 inches		Cylinder (C3), D3= 3 inches	
		Thumb	Finger	Thumb	Finger	Thumb	Finger
1	Angle (radians)	± 0.13	± 0.482	± 0.22	± 0.528	± 0.30	±0.578
2	Velocity (rads/s)	0.04	0.15	0.07	0.16	0.1	0.19
3	Acceleration (rads/s^2)	±0.04	±0.15	±0.07	±0.16	±0.1	±0.19
4	Torque (N-mm)	T1=-0.013 T2= 0.0032	T1= 0.001 T2= -0.04 T3= 0.11	T1=-0.015 T2= 0.005	T1= 0.001 T2= -0.04 T3= 0.11	T1=-0.021 T2= 0.005	T1= 0.001 T2= -0.04 T3= 0.11

4.2. Spherical objects

A spherical ball is placed at a fixed position within the workspace of the hand in the 3D space to perform the grasping task. The process involves the movement of the hand from its rest position to hold an object and thereafter returning back to its home position. Simulations are conducted where the initial position of the hand is shown in Fig. 12 at the beginning of the grasp. Then the hand moves to reach the object as shown in Fig.13 to grasping a spherical object. The simulation time is set as 10 s for the complete grasp process where the Position in radians, Velocity in radians per s, Acceleration in radians per sq. s and the Torque in N-mm are computed for the thumb and fingers separately. In the case of the sphere, all the fingers exhibit different motions, and thus simulation results are presented for the thumb and the three fingers for grasping a sphere, as shown in Fig. 14.

Thereafter plots are analyzed, and the peak values of hand parameters are recorded while grasping a sphere of as listed in Table 2.

The angular motions of all the fingers are distinct while grasping a sphere. Therefore, after analyzing the plots obtained from the simulation for grasping a spherical object, it has been observed that the third finger shows the maximum value of the joint angle, velocity, acceleration, and torque. This proves that, with an increase in the joint angles, the velocity as well as acceleration increases, and as a result, the torque required for the movement of the fingers also increases.

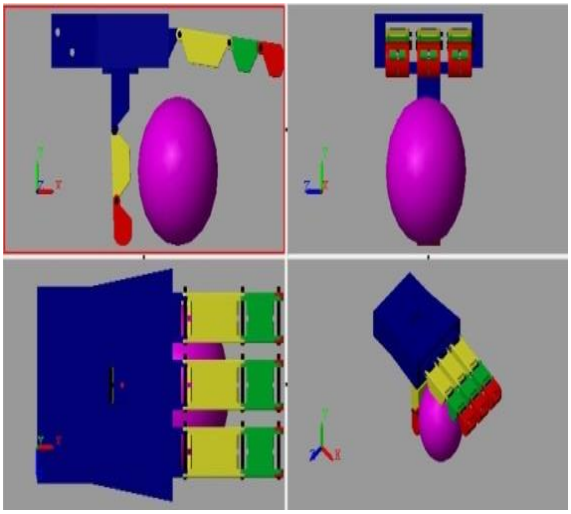


Fig. 12. Initial position of hand before grasping.

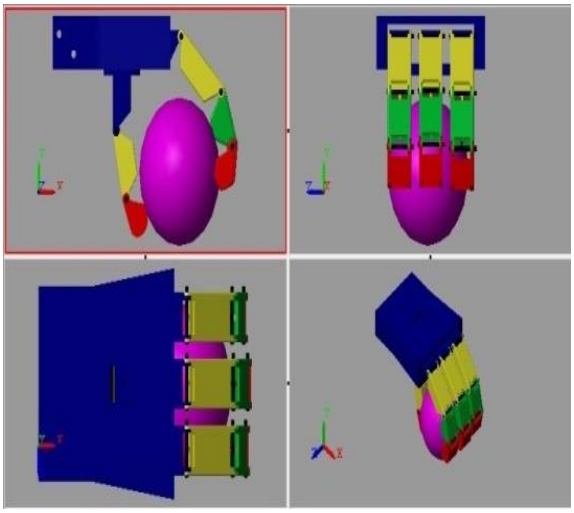
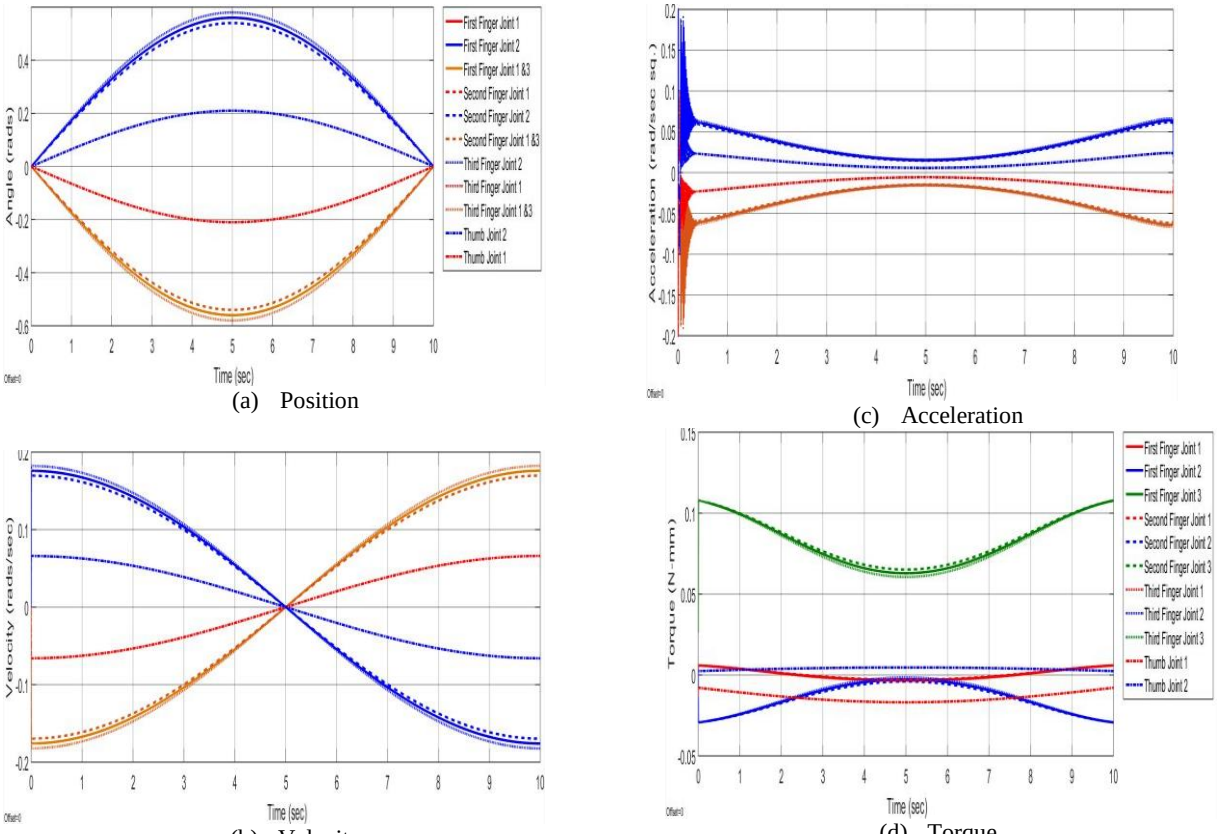


Fig. 13. The position of hand while grasping a sphere.



(a) Position (c) Acceleration

(b) Velocity (d) Torque

Fig. 14. Motion plots while grasping a sphere.

Table 2. Peak values of hand parameters while grasping spherical object.

S. No.	Parameters	Sphere of diameter 3.5 inches			
		Thumb	**First finger**	**Second finger**	**Third finger**
1.	Position (radians)	± 0.21	± 0.56	± 0.54	± 0.58
2.	Velocity (rad/s)	± 0.065	± 0.18	± 0.17	± 0.19
3.	Acceleration (rad/s^2)	± 0.065	± 0.18	± 0.17	± 0.19
4.	Torque (N-mm)	T1= -0.017 T2= 0.005	T1= 0.001 T2= -0.03 T3= 0.11	T1= 0.001 T2= -0.025 T3= 0.11	T1= 0.001 T2= -0.04 T3= 0.11

5. Conclusions

The present work demonstrates a control process for simulating the grasp performance of the designed four-fingered tendon actuated robotic hand in the virtual 3D environment. The MATLAB programming functions are incorporated with custom blocks to control the subsystems according to the desired needs. The fingers are controlled in order to mimic the kinematics and dynamics of the human hand. For this purpose, three cylindrical objects of distinct diameters and a sphere were used to analyze the grasp capabilities of the robotic hand. Results are obtained for the different angular motions, joint velocities, accelerations, and torques required to perform the grasping tasks. The peak values of these parameters are examined and the hand performance is evaluated. These studies indicate that the designed hand can perform smooth and stable grasping of objects with different size and shapes. Future work involves the determination of different contact points by the fingertips of

the hand while grasping any objects and validation of the obtained results experimentally as well as through Kinematics using MATLAB Programming.

References

[1] W. Widhiada, Et. al. "Design and control of three fingers motion for dexterous assembly of compliant elements", *International Journal of Engineering, Science and Technology*, Vol. 3, No. 6, pp. 18-34, (2011).

[2] Nakamura, K. Nagal, T. Yoshikawa, "Dynamics and stability in coordination of multiple robotic mechanisms", *International Journal on Robotics Research*, Vol. 8, No. 2, pp. 44-61, (1989).

[3] D. P. Chevallier, S. Payandeh, "On computing the friction forces associated with three-fingered grasp", *International Journal on Robotics Research*, Vol.13, No. 2, pp. 119-126, (1994).

[4] C. Xiong, Y. Xiong, "Stability index and contact configuration planning of multifingered grasp", *Journal of Robotic Systems*, Vol.15, No. 4, pp. 183-190, (1998).

[5] M. T. Ciocarlie and P. K. Allen, "Hand Posture Subspaces for Dexterous Robotic Grasping," *The International Journal of Robotics Research*, Vol. 28, No. 7, pp. 851-867, (2009).

[6] C. Goldfeder and P. K. Allen, "Data-driven grasping," *Autonomous Robots*, Vol. 31, No. 1, pp. 1-20, (2011).

[7] S. Geidenstam, K. Huebner, D. Banksell, and D. Kragic, "Learning of 2D grasping strategies from box-based 3D object approximations," *in Proceedings of Robotics: Science and Systems*, Vol. 1, No. 1, pp. 1-9, (2009).

[8] A. Saxena, J. Driemeyer, J. Kearns, and A. Y. Ng, "Robotic grasping of novel objects," *in Advances in Neural Information Processing Systems*, Vol. 19, No. 1, pp. 1209-1216, (2006).

[9] M. Popovic, D. Kraft, L. Bodenhagen, E. Baseski, N. Pugeault, D. Kragic, T. Asfour, and N. Kr¨uger, "A strategy for grasping unknown objects based on co-planarity and colour information," *Robotics and Autonomous Systems*, Vol. 58, No. 5, pp. 551-565, (2010).

[10] D. Berenson and S. Srinivasa, "Grasp synthesis in cluttered environments for dexterous hands," *in IEEE-RAS International Conference on Humanoid Robots (Humanoids08)*, Vol.1, No. 1, pp. 189-196, (2008).

[11] Z. Li and S. Sastry, "Task oriented optimal grasping by multifingered robot hands," *in ICRA*, Vol. 1, No. 1, pp. 389-394, (1988).

[12] M. Prats, P. Sanz, and A. del Pobil, "Task-oriented grasping using hand preshapes and task frames," *in IEEE Robotics and Automation*, Vol. 1, No. 1, pp. 1794-1799, (2007).

[13] C. Rosales, L. Ros, J. M. Porta, and R. Suarez, "Synthesizing Grasp Configurations with Specified Contact Regions," *The International Journal of Robotics Research*, Vol.1, No. 4, pp. 431-443, (2010).

[14] D. Song, K. Huebner, V. Kyrki, and D. Kragic, "Learning task constraints for robot grasping using graphical models", *in IROS*, pp. 1579-1585, (2010).

[15] R. Detry, D. Kraft, A. Buch, N. Kruger, and J. Piater, "Refining grasp affordance models by experience," *in IEEE International Conference on Robotics and Automation*, Vol.1, No. 1, pp. 2287-2293, (2010).

[17] J. Aleotti and S. Caselli, "Part-based robot grasp planning from human demonstration," in ICRA, pp. 4554-4560. (2011).

[18] T. Yoshikawa, and K. Nagai, "Evaluation and Determination of Grasping Forces for Multi-fingered Hands", *In Proc. IEEE Int. Conf. on Robotics and Automation*, pp. 245-248, (1988).

[19] Y. Nakamura, K. Nagai, and T. Yoshikawa, "Dynamics and Stability in Coordination of Multiple Robotic Mechanisms", *Int. Journal of Robotics*

Research, Vol. 8, No. 2, pp. 44–61, (1989).

[20] W. Hassan and A. Mahmood, "Mathematical Modeling and Optimal Control of Cricket Bowling Action based on SimMechanics in Matlab", *IEEE*. (2017).

[21] K. Seiichiro, Y. Matsumoto, and K. Ohnisihi, "Modeling of Force Sensing and Validation of disturbance observer for Force Control", *IEEE Transactions on industrial electronics*, Vol. 54, No. 1, pp. 530-538, (2007).

[22] T. Johan, et. al., "Demontration-based learning and control for automatic grasping", *Springer-verlag*, (2008).

[23] Z. Leon, "Simulation in Robotics", *Science Direct-Mathematics and Computer Simulation*, Vol. 79, pp. 879-897, (2008).

[24] S. S. Ohol and S. R. Kajale, "Simulation of Multi-finger Robotic Gripper for Dynamic Analysis of Dexterous Grasping", *Proceedings of the World Congress on Engineering and Computer Science*, pp. 908-914, (2008).

[25] M. S. Alshamasin, F. Ionescu, and R. T. Al-Kasasbeh, "Kinematic Modeling and Simulation of a SCARA Robot by Using Solid Dynamics and Verification by MATLAB/Simulink", *European Journal of Scientific Research*, Vol. 37, No. 3, pp. 388-405, (2009).

[26] M. Schlotter, "Multibody System Simulation with SimMechanics", *Technical Report, Darmstadt University of Technology*, (2003).

[27] S. S. Sun, and Q. H. M. Meng, "Dynamic Simulation of Robot Manipulators Using Graphical Programming Packages", *Proc. of IEEE Pacific Rim Conf. on Communications, Computers, and Signal Processing, Victoria, BC, Canada*, pp. 521-524, (1995).

[28] G. D. Wood, and D. C. Kennedy, "Simulating Mechanical Systems in Simulink with SimMechanics", *Tech. Report, The Mathworks Inc*, (2003).

[29] L. Zlajpah, "Simulation in robotics", *Proceedings of Mathematics and Computers in Simulation, Elsevier*, pp. 879-897, (2008).

[30] N. S. Tlale, and P. Zhang, "Teaching the design of parallel manipulators and their controllers, implementing MATLAB, Simulink, SimMechanics and CAD", *Int. J. Engineering. Ed.*, Vol. 21, No. 5, pp. 838-845, (2005).

[31] L. Yu, L. Zhang, and S. Yang, "Kinematic simulation and analysis of 3-RPS parallel robot on SimMechanics", *Proc. Int. Conf. on Information and Automation, Harbin, China*, pp. 2363-2367, (2010).

[32] D. Hroncova and M. Pastor, "Mechanical System and SimMechanics Simulation". *American Journal of Mechanical Engineering*, Vol. 1, No.7, pp. 251-255, (2013).

[33] A. D. Udai et. al., "Dynamic Simulation of a KUKA KR5 Industrial Robot using MATLAB SimMechanics", National Conference on Machines and Mechanisms, Vol. 1, No. 8, pp. 1-8, (2011).

[34] A. Singla et. al., "Matlab/ simMechanics based control of four-bar passive lower-body mechanism for rehabilitation", *Perspectives in Sciences*, Vol. 8, pp. 351-354, (2016).

[35] J. A. Corrales et. al., "Modelling and Simulation of a Multi-fingered Robotic hand for grasping Tasks", *Int. Conference on Control, Automation, Robotics and vision, IEEE*, pp. 1577-1582, (2010).

[36] H. Kawasaki, T. Komatsu, and K. Uchiyama, "Dexterous anthropomorphic robot hand with distributed tactile sensor: Gifu hand II", IEEE/*ASME Transactions on Mechatronics*, Vol.7, No. 3, pp. 296-303, (2002).

[37] S. Jacobsen, J. Wood, D. Knutti, and K. Biggers, "The UTAH/M.I.T. Dextrous Hand: Work in Progress", *The International Journal of Robotics Research*, Vol. 3, No. 4, pp. 21-50, (1984).

[38] K. S. Salisbury and B. Roth, B, "Kinematics and Force Analysis of

Articulated Mechanical Hands", ASME *Journal of Mechanisms, Transmissions and Actuation in Design*, Vol. 105, No. 1, pp. 35-41, (1983).

[39] S. Schulz, C.Pylatiuk, and G. Bretthauer, "A New Ultra-light Anthropomorphic Hand", *Proceedings of the IEEE International Conference on Robotics and Automation*, Vol.1, No. 1, (2001).

[40] P. Kyberd and P. Chappell, "The Southhampton Hand: an intelligent myoelectric prosthesis", *Journal of Rehabilitation Research and Development*, Vol. 31, No. 4, pp. 326-334, (1994).

[41] C. S. Lovchik, and M. A. Diftler, "The robonaut hand: a dexterous robot hand for space. *Proceedings of IEEE International Conference on Robotics & Automation*, pp. 907-912, (1999).

[42] J. Butterfass, J. et. al., "DLR-hand II: Next generation of a dextrous robot hand", *Proc. IEEE International Conference on robotics and Automation*, Vol. 1, No. 1, (2001).

[43] E. Neha, M. Suhaib and S. Mukherjee, "Motion Planning For A Four-Fingered Robotic Hand", *Advances in Robotics, ACM digital library*, pp. 1-5, (2017).

[44] T. Iberall, "Human prehension and dexterous robot hands", Int. Journal of Robotic Research, Vol. 16, No. 3, pp. 285-299, (1997).

How to cite this paper:

E. Neha, M. Suhaib, S. Asthana and S. Mukherjee, " Grasp analysis of a four-fingered robotic hand based on matlab simmechanics", *Journal of Computational and Applied Research in Mechanical Engineering*, Vol. 9, No. 2, pp. 169-182, (2019).

DOI: 10.22061/jcarme.2019.3427.1390

URL: http://jcarme.sru.ac.ir/?_action=showPDF&article=1033